Rod & Power Cable Auto-Rotating Chuck 38 mm (1.5 in.) Fixture

This fixture enables the automatic measurement of diameter variation.

- Chuck Diameter Range: 1.57 - 38 mm (0.062 - 1.5 in.)
- Stepped jaw chuck design permits chucking on inside diameters from 19.05 - 50.8 mm (0.75 - 2.0 in.)
- Step angle rotation programmable in 1° increments
- Maximum step angle error between positions is 0.5° in the half step mode
- Intelligent fixture identification and setup via I^2C bus interface
- Plugs into the fixture port on 283 BenchMike
- Captures maximum, minimum, average, difference values, which may be printed or sent to a computer via an RS232 interface
- Optional on-screen circular and X-Y graphical data displays are available showing the angular location of the maximum and minimum values
- Fixed Increment Rotation Mode: User-defined number of positions to be measured. Increments can be entered in number of positions, or angular increment between measured positions. No measurement occurs during rotation.
- Continuous Rotation Mode: Measurement occurs during rotation. User-defined speed of rotation in R.P.M., and the total number of revolutions. Useful for capturing X and Y dimensions on small rectangular parts.

Rod & Power Cable Auto-Rotating Chuck

Part Number
84022

BETA LaserMike

Dimensional Specifications

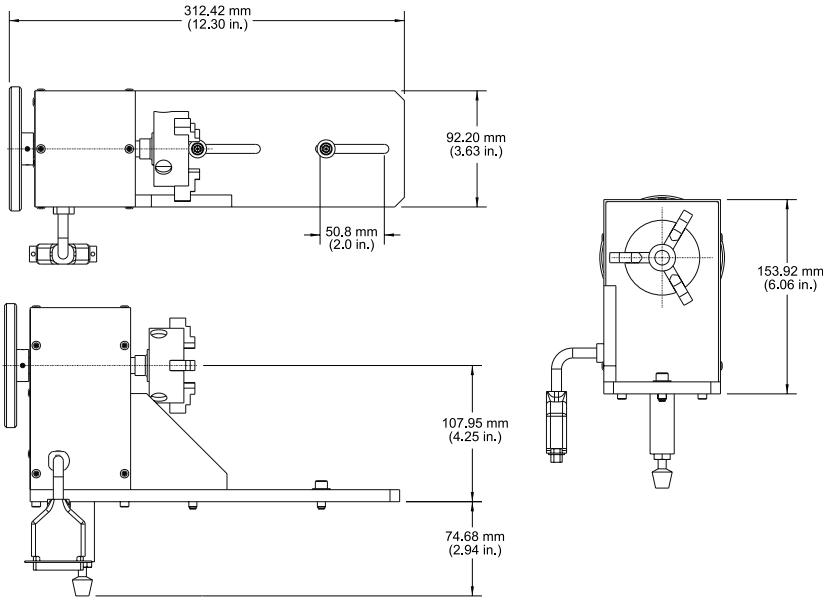

Beta LaserMike Corporate Offices

USA
8001 Technology Blvd.
Dayton, OH 45424
USA
Ph: +1 937 233 9935
Fax: +1 937 233 7284

Europe
Stirling Road
Cressex Business Park
High Wycombe,
Bucks HP12 3RT
Ph: +44 1494 89 44 00
Fax: +44 1494 89 44 01

Asia Pacific
2nd Floor Hankook
Tire Building
344 Kwangjang-Dong,
Kwangjin-Ku
Seoul 143-210 Korea
Ph: +82 2 444 9296
Fax: +82 2 444 9297

www.betalasermike.com

BETA LaserMike